TOSHIBA

[illegible]

[illegible]

[illegible] **BHP-M10**

[illegible]

- [illegible]

- [illegible]
- [illegible]

⚠ [illegible]	[illegible]
⚠ [illegible]	[illegible]※[illegible]

※[illegible]

- [illegible]
- [illegible]

⚠ [illegible]
[illegible]
[illegible]
[illegible]
[illegible]
[illegible]
[illegible]

⚠ [illegible]
[illegible]

1.□□□□□□□□□

■□□

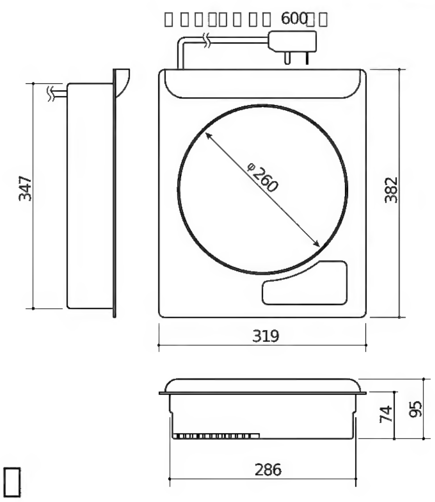

■□□□□□□

□□□□□　　□□□□□□□□

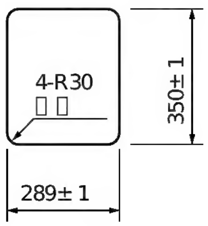

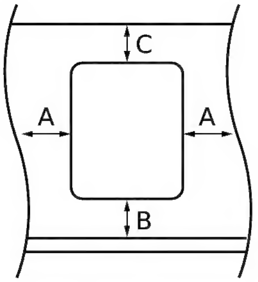

	□□□□
A	20□□□
B	20□□□
C	40□□□

2.□□□□□□□□

1.□□□□

□□□□□□□□□□□□□□□□□□□□□□□□□□□□□□□□□ □□

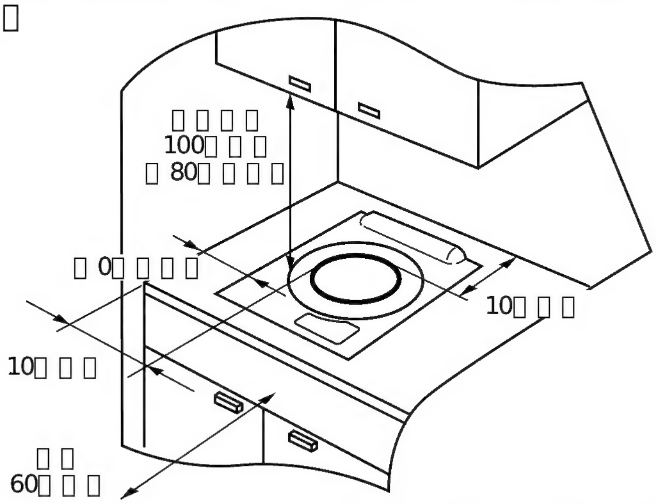

□ □□□□□□□□□□□□□□□□□□□□□□□□□□□□□□

■[illegible]

● [illegible]

● [illegible]

● [illegible]35℃[illegible]

■[illegible]
[illegible]

[illegible]

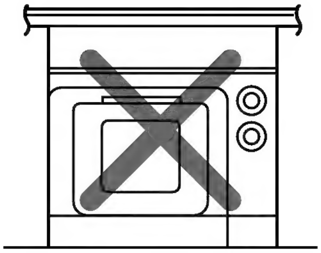

2.[illegible]

■[illegible]200V[illegible]20A[illegible]0.6m[illegible]

3.[illegible]

■[illegible]

■[illegible]

■[illegible]

3.[illegible]

[illegible]

■[illegible] 20A[illegible]

■[illegible]

D[illegible]

[illegible]

■[illegible]

● [illegible]

[illegible] DC2042E [illegible]

[illegible] 250V [illegible] 20A

[illegible] 2 [illegible]

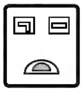

● [illegible] 0.6m [illegible]

4.[illegible]

[illegible]

●[illegible] 4 [illegible]

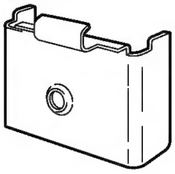

●[illegible] 4 [illegible]

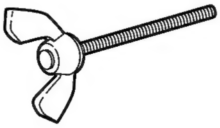

※[illegible]

[illegible]

[illegible]

■[illegible]

• [illegible]

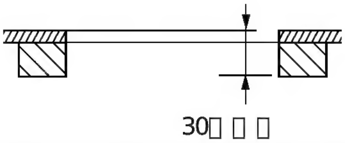

■[illegible]

[illegible] 30 [illegible]

● [illegible] 30 [illegible] 30 [illegible]

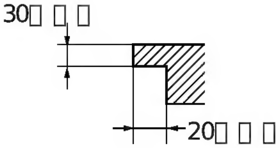

■[illegible]

[illegible]

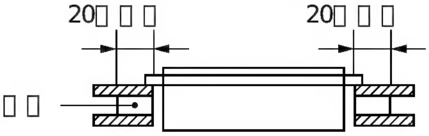

5.[illegible]

[illegible]

[illegible]

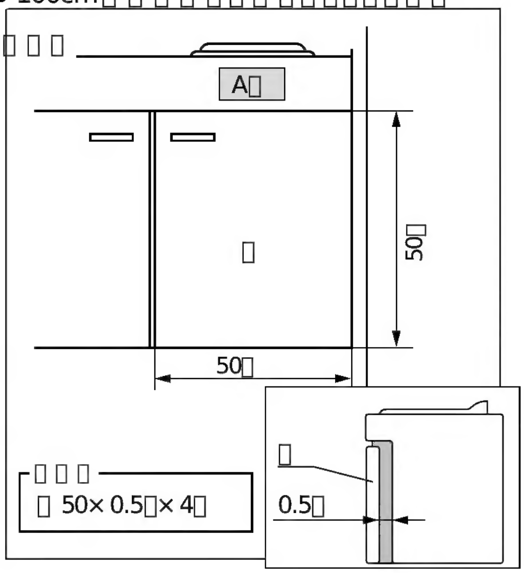

• [illegible] A [illegible] 100cm² [illegible] 5 × 20 [illegible]

[illegible]

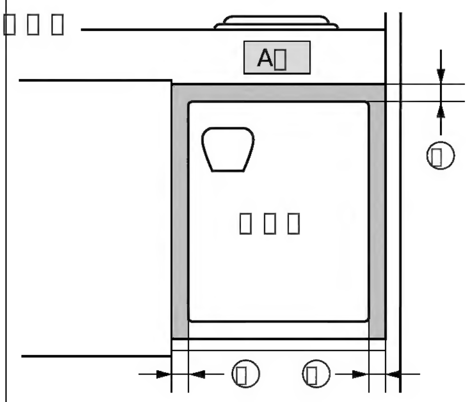

	[illegible]
[illegible]	1[illegible]
[illegible]	1[illegible]
[illegible]	5[illegible]

■[illegible]

• [illegible] 100cm² [illegible]

6.[illegible]

1.[illegible]

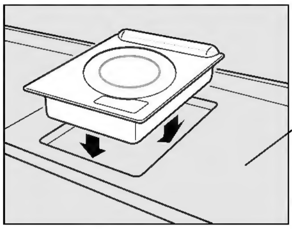

2.[illegible]

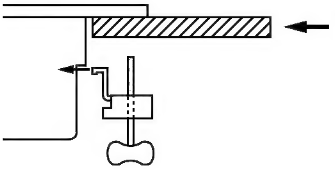

3.[illegible]

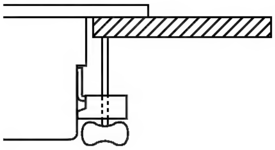

4.[illegible]

7. [illegible]

■ [illegible]

[illegible]

[illegible]	[illegible] 4 [illegible]
[illegible]	[illegible]
	[illegible]
[illegible]	1 [illegible] 200V [illegible]
	2 [illegible] 1 [illegible]
	3 [illegible] • [illegible]
[illegible]	1 [illegible]
	2 [illegible]

[illegible]

[illegible]

[illegible] 東芝

[illegible] HA [illegible]

[illegible] 105-8001 [illegible] - [illegible] - [illegible]

E0669